atrin electronic
Expertise, variety and quality

www.atrinelec.com

آترین الکترونیک
تخصص ، تنوع و کیفیت

02166766957 -02166766927

تهران پاساژ امجد طبقه1 واحد 16

info@atrinelec.com

@atrinelec

SGS-THOMSON MICROELECTRONICS

TDA7297

15+15W DUAL BRIDGE AMPLIFIER

- WIDE SUPPLY VOLTAGE RANGE (6V -18V)
- MINIMUM EXTERNAL COMPONENTS
  - NO SWR CAPACITOR
  - NO BOOTSTRAP
  - NO BOUCHEROT CELLS
  - INTERNALLY FIXED GAIN
- STAND-BY & MUTE FUNCTIONS
- SHORT CIRCUIT PROTECTION
- THERMAL OVERLOAD PROTECTION

TECHNOLOGY BI20II

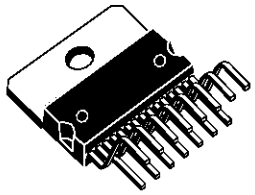

Multiwatt 15

ORDERING NUMBER: TDA7297

DESCRIPTION

The TDA7297 is a dual bridge amplifier specially designed for TV and Portable Radio applications.

BLOCK AND APPLICATION DIAGRAM

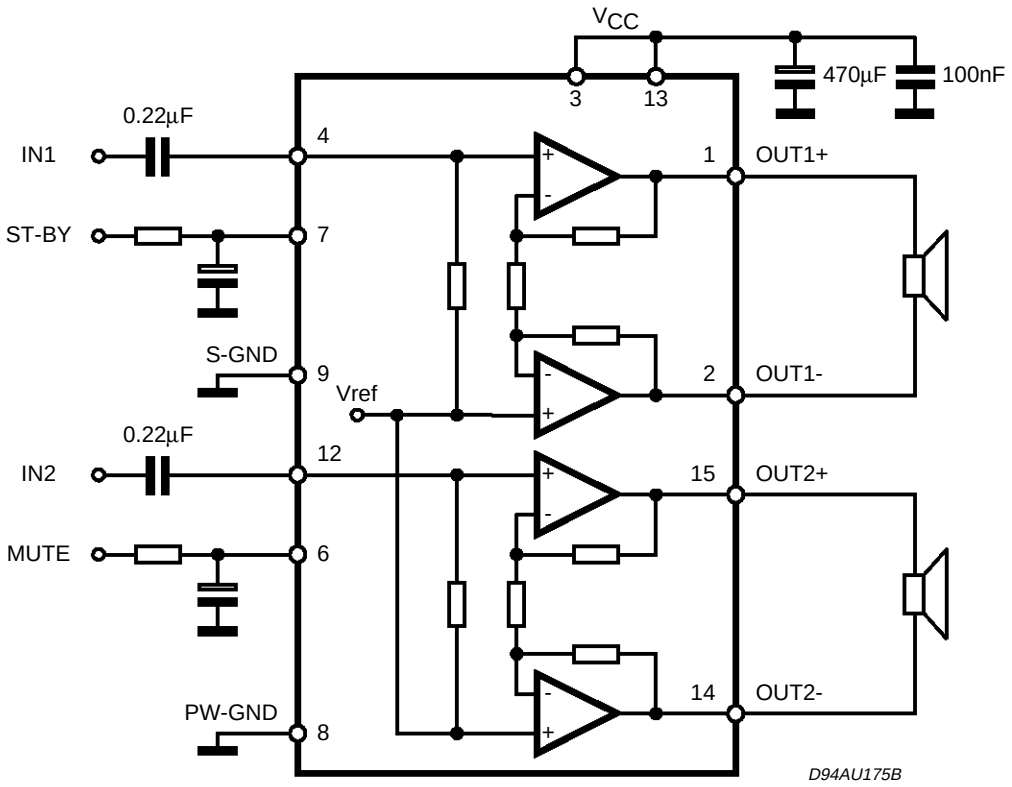

ABSOLUTE MAXIMUM RATINGS

Symbol	Parameter	Value	Unit
V_S	Supply Voltage	20	V
I_O	Output Peak Current (internally limited)	2	A
P_{tot}	Total Power Dissipation (T_{case} = 70°C)	33	W
T_{op}	Operating Temperature	0 to 70	°C
T_{stg}, T_j	Storage and Junction Temperature	-40 to +150	°C

THERMAL DATA

Symbol	Description	Value		Unit
$R_{th\ j\text{-}case}$	Thermal Resistance Junction to case	Typ. 1.4	Max. 2	°C/W

PIN CONNECTION (Top view)

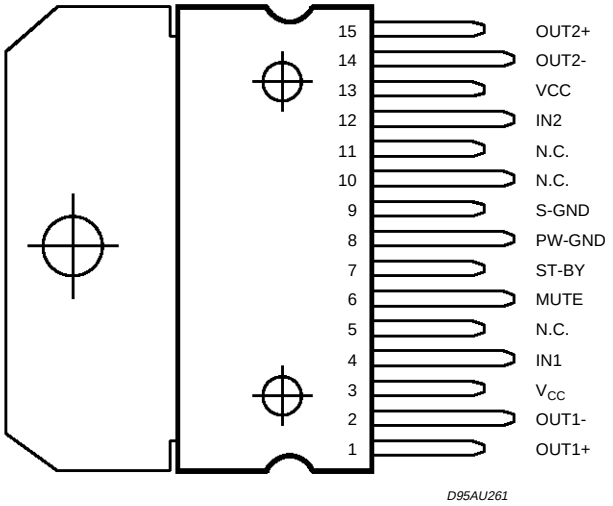

ELECTRICAL CHARACTERISTICS (V_{CC} = 16.5V, R_L = 8Ω, f = 1kHz, T_{amb} = 25°C unless otherwise specified.)

Symbol	Parameter	Test Condition	Min.	Typ.	Max.	Unit
V_{CC}	Supply Range		6.5		18	V
I_q	Total Quiescent Current	$R_L = \infty$		50	65	mA
V_{OS}	Output Offset Voltage				120	mV
P_O	Output Power	THD = 10%	13	15		W
THD	Total Harmonic Distortion	P_O = 1W		0.1	0.3	%
		P_O = 0.1W to 5W f = 100Hz to 15kHz			1	%
SVR	Supply Voltage Rejection	f = 100Hz V_R = 0.5V	40	56		dB
CT	Crosstalk		46	60		dB
A_{MUTE}	Mute Attenuation		60	80		dB
T_W	Thermal Threshold			150		°C
G_V	Closed Loop Voltage Gain		31	32	33	dB
ΔGv	Voltage Gain Matching				0.5	dB
R_i	Input Resistance		25	30		KΩ

ELECTRICAL CHARACTERISTICS (Continued)

Symbol	Parameter	Test Condition	Min.	Typ.	Max.	Unit
VT_{MUTE}	Mute Threshold	V_O = -30dB	2.3	2.9	4.1	V
VT_{ST-BY}	St-by Threshold		0.8	1.3	1.8	V
I_{ST-BY}	ST-BY current V6 = GND				100	µA
e_N	Total Output Noise Voltage	A curve f = 20Hz to 20kHz		150 220	 500	µV µV

APPLICATION SUGGESTION

STAND-BY AND MUTE FUNCTIONS

(A) Microprocessor Application

In order to avoid annoying "Pop-Noise" during Turn-On/Off transients, it is necessary to guarantee the right St-by and mute signals sequence.
It is quite simple to obtain this function using a microprocessor (Fig. 1 and 2).

At first St-by signal (from mP) goes high and the voltage across the St-by terminal (Pin 7) starts to increase exponentially. The external RC network is intended to turn-on slowly the biasing circuits of the amplifier, this to avoid "POP" and "CLICK" on the outputs.

When this voltage reaches the St-by threshold level, the amplifier is switched-on and the external capacitors in series to the input terminals (C3, C5) start to charge.

It's necessary to mantain the mute signal low until the capacitors are fully charged, this to avoid that the device goes in play mode causing a loud "Pop Noise" on the speakers.

A delay of 100-200ms between St-by and mute signals is suitable for a proper operation.

Figure 1: Microprocessor Application

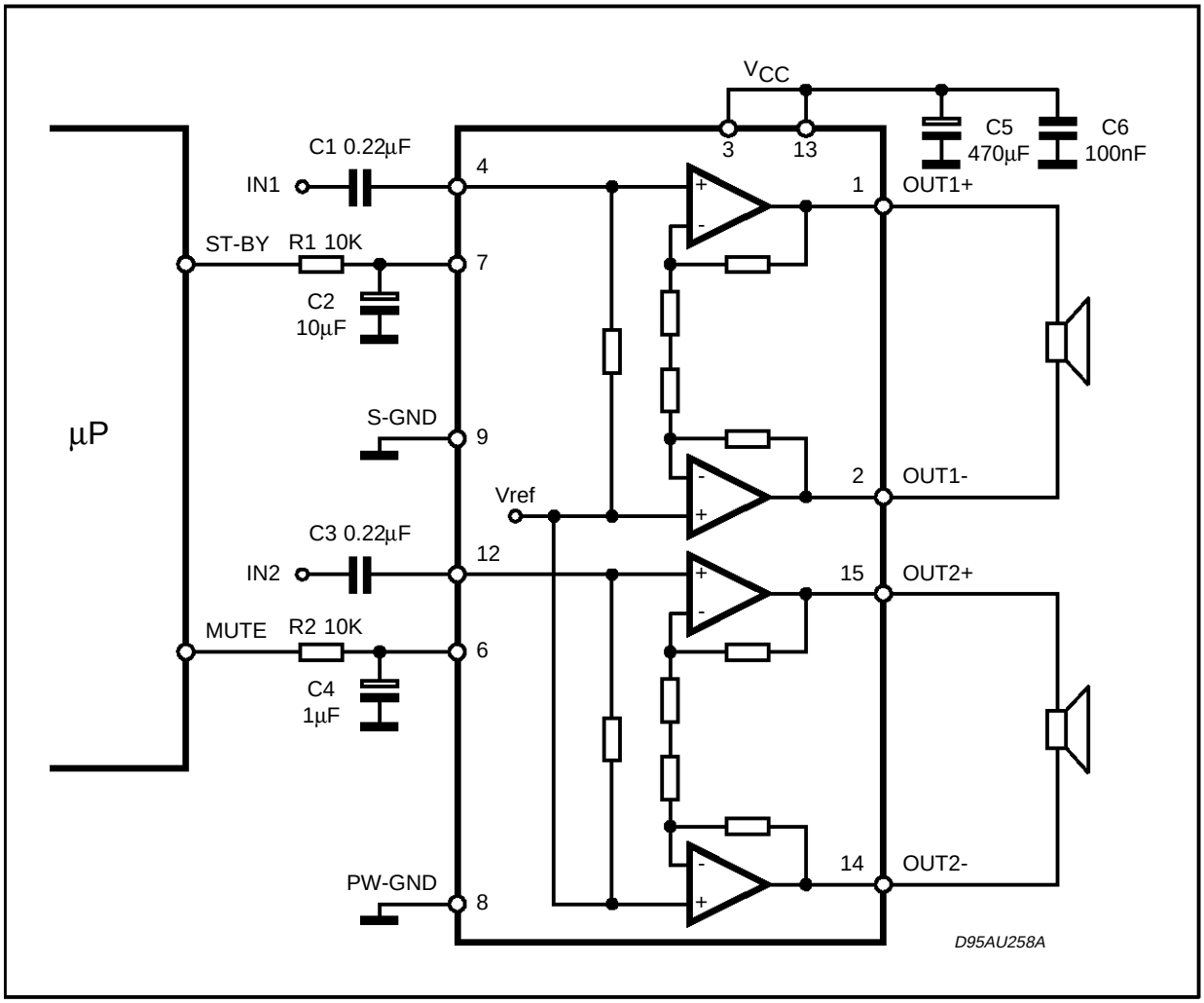

Figure 2: Microprocessor Driving Signals.

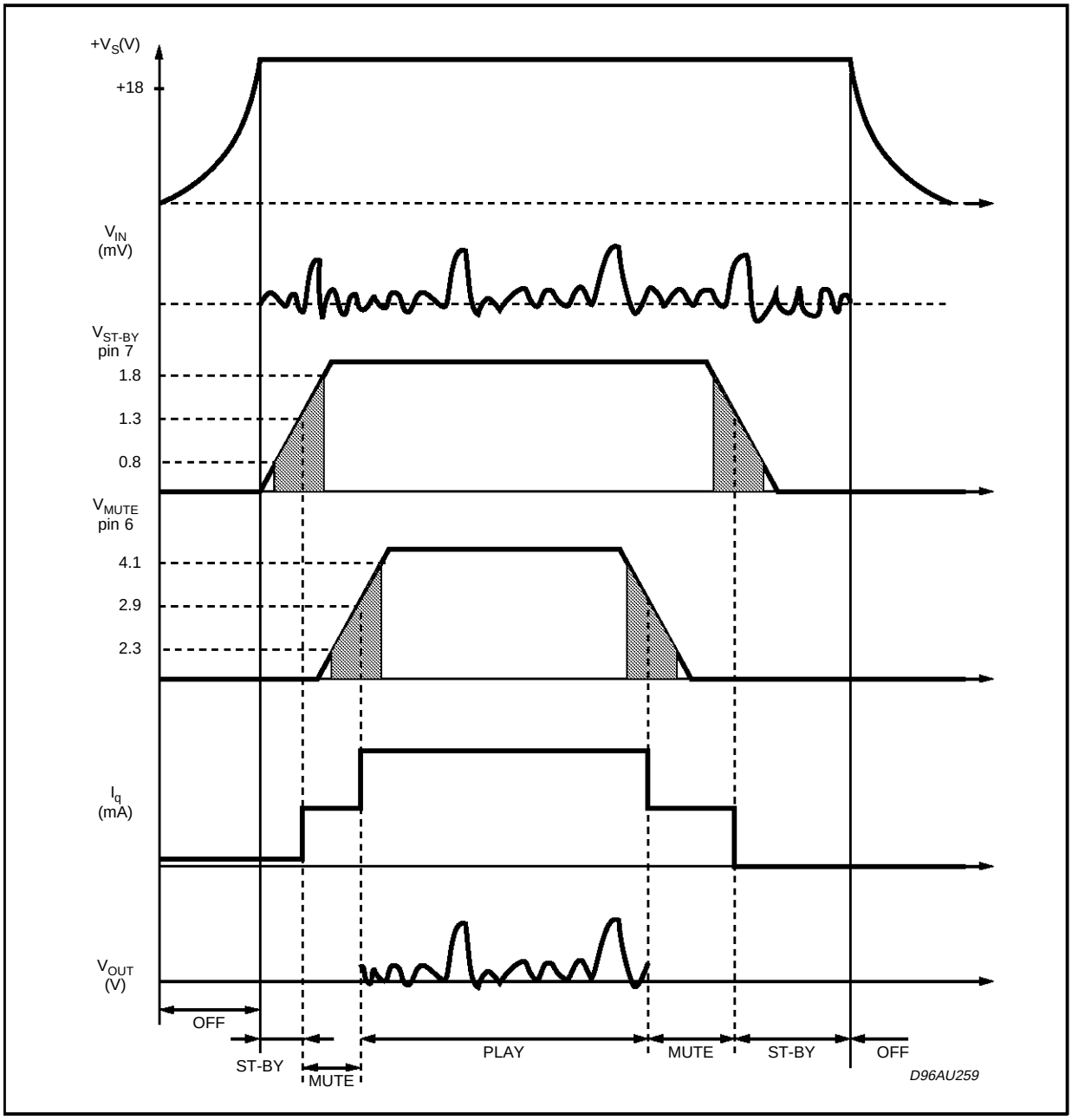

(B) Low Cost Application

In low cost applications where the mP is not present, the suggested circuit is shown in fig.3.

The St-by and mute terminals are tied together and they are connected to the supply line via an external voltage divider.

The device is switched-on/off from the supply line and the external capacitor C4 is intended to delay the St-by and mute threshold exceeding, avoiding "Popping" problems.

Figure 3: Stand-alone Low-cost Application.

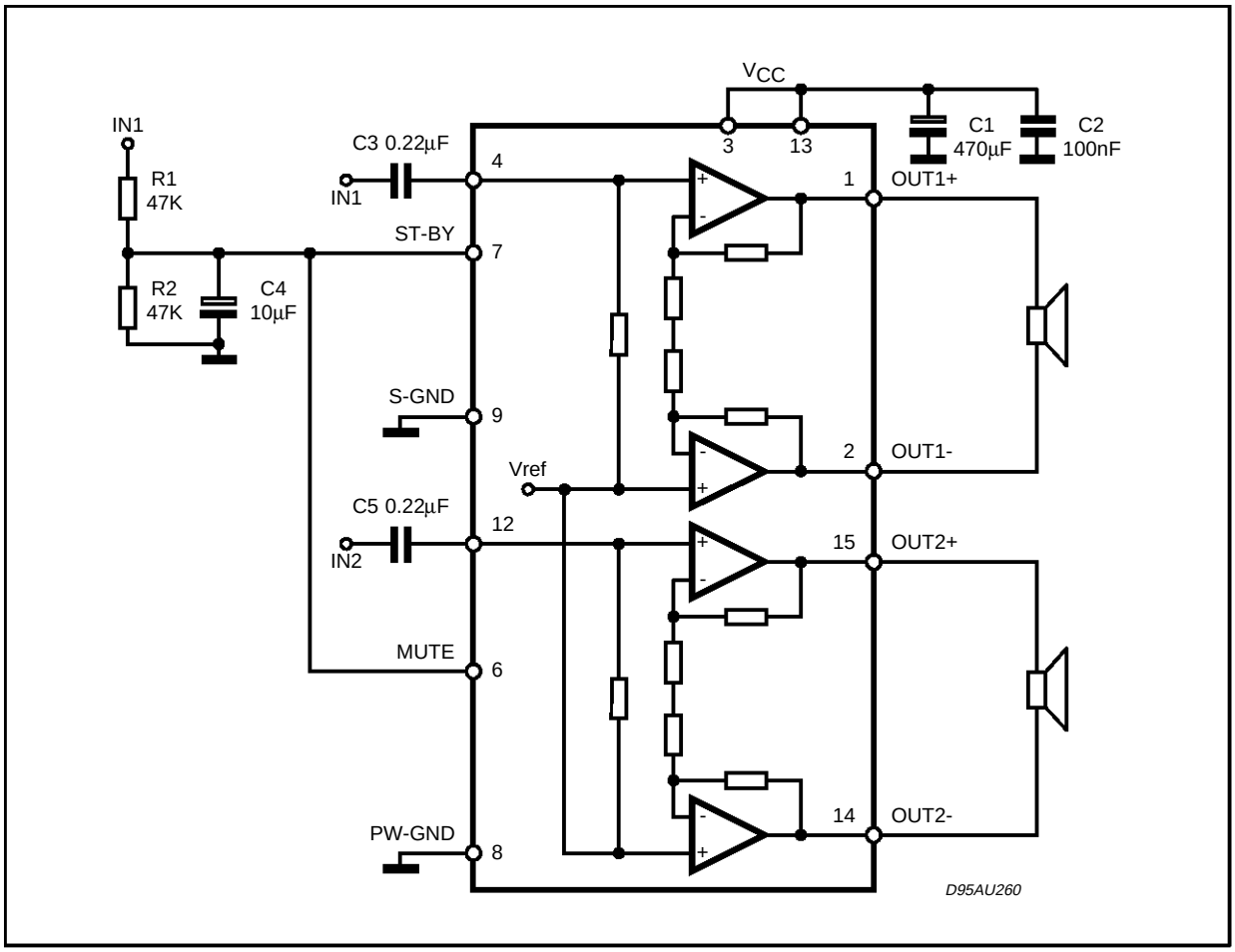

Figure 3b: PCB and Component Layout of the Application Circuit (Fig. 1).

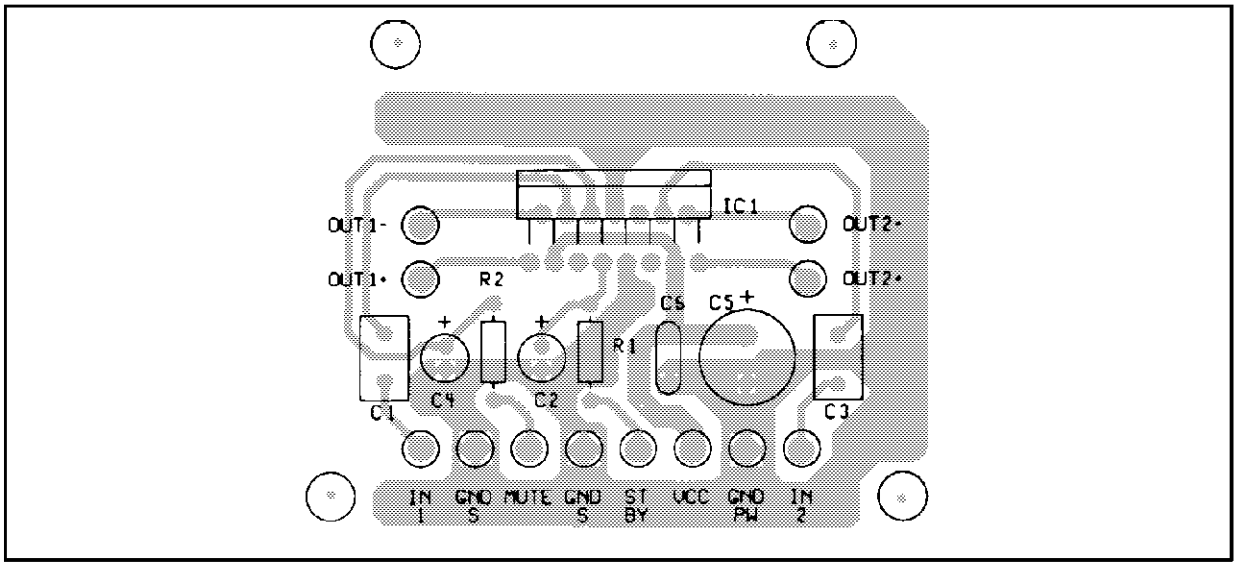

Figure 4: Distortion vs Output Power

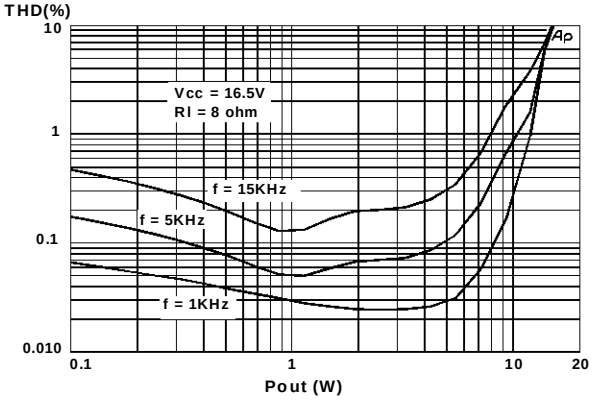

Figure 5: Distortion vs Output Power

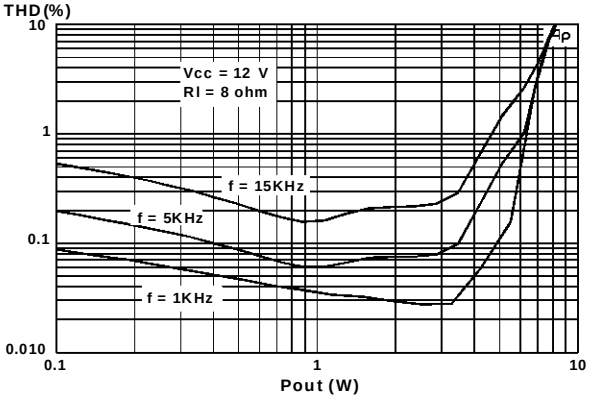

Figure 6: Distortion vs Frequency

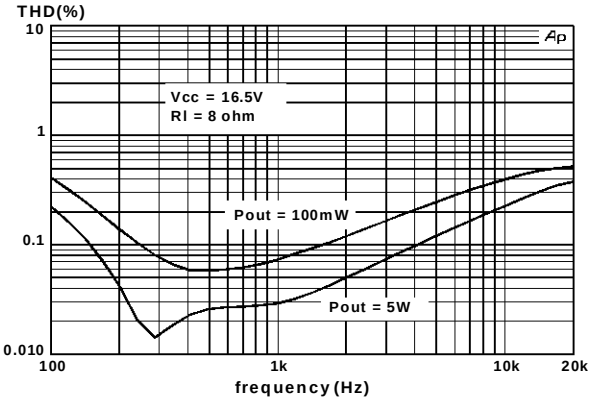

Figure 7: Frequency Respone

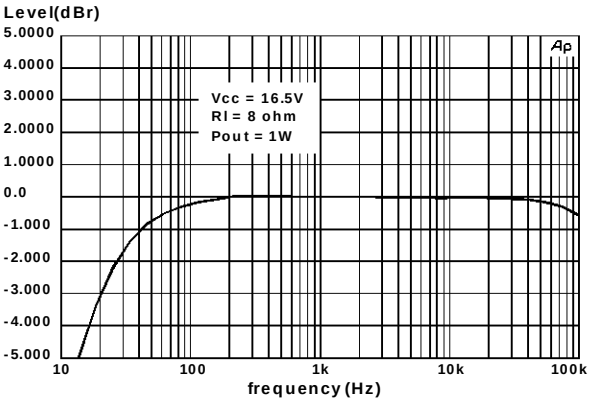

Figure 8: Output Power vs Supply Voltage

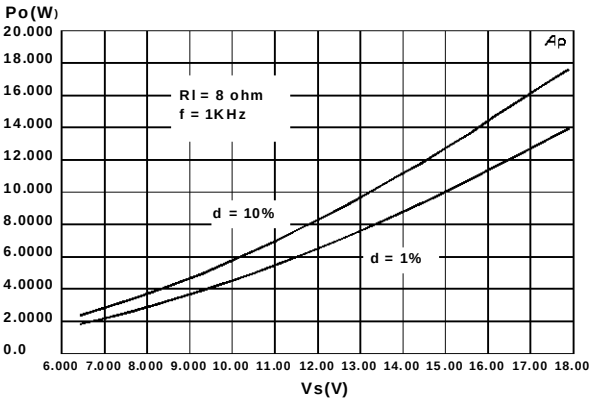

Figure 9: Total Power Dissipation & Efficiency vs Output Power

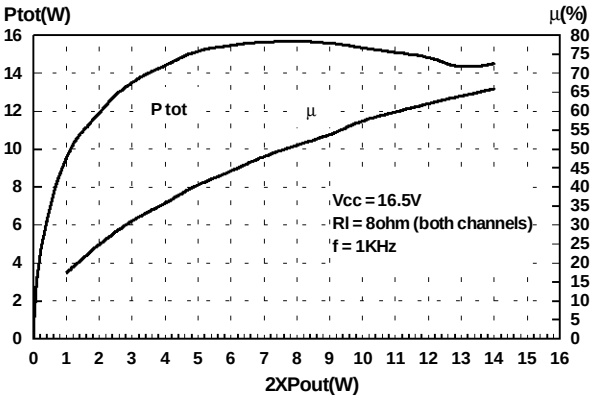

Figure 10: Mute Attenuation vs. V pin.6

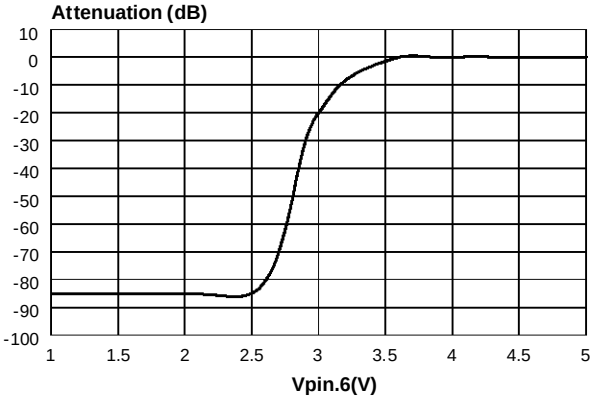

Figure 11: Stand-By Attenuation vs Vpin.7

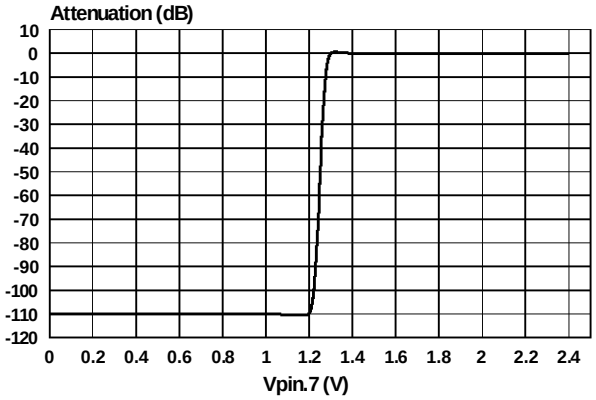

Figure 12: Quiscent Current vs. Supply Voltage

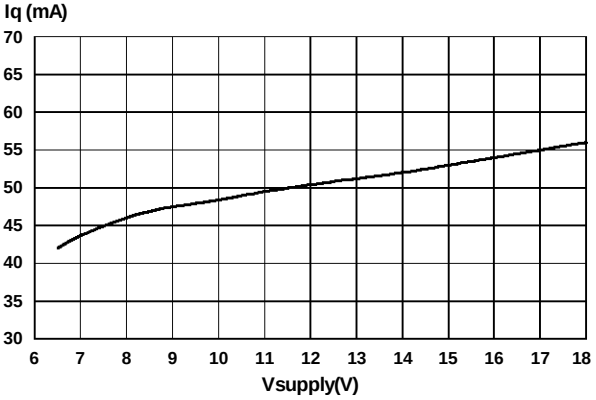

MULTIWATT15 PACKAGE MECHANICAL DATA

DIM.	mm			inch		
	MIN.	TYP.	MAX.	MIN.	TYP.	MAX.
A			5			0.197
B			2.65			0.104
C			1.6			0.063
D		1			0.039	
E	0.49		0.55	0.019		0.022
F	0.66		0.75	0.026		0.030
G	1.02	1.27	1.52	0.040	0.050	0.060
G1	17.53	17.78	18.03	0.690	0.700	0.710
H1	19.6			0.772		
H2			20.2			0.795
L	21.9	22.2	22.5	0.862	0.874	0.886
L1	21.7	22.1	22.5	0.854	0.870	0.886
L2	17.65		18.1	0.695		0.713
L3	17.25	17.5	17.75	0.679	0.689	0.699
L4	10.3	10.7	10.9	0.406	0.421	0.429
L7	2.65		2.9	0.104		0.114
M	4.25	4.55	4.85	0.167	0.179	0.191
M1	4.63	5.08	5.53	0.182	0.200	0.218
S	1.9		2.6	0.075		0.102
S1	1.9		2.6	0.075		0.102
Dia1	3.65		3.85	0.144		0.152

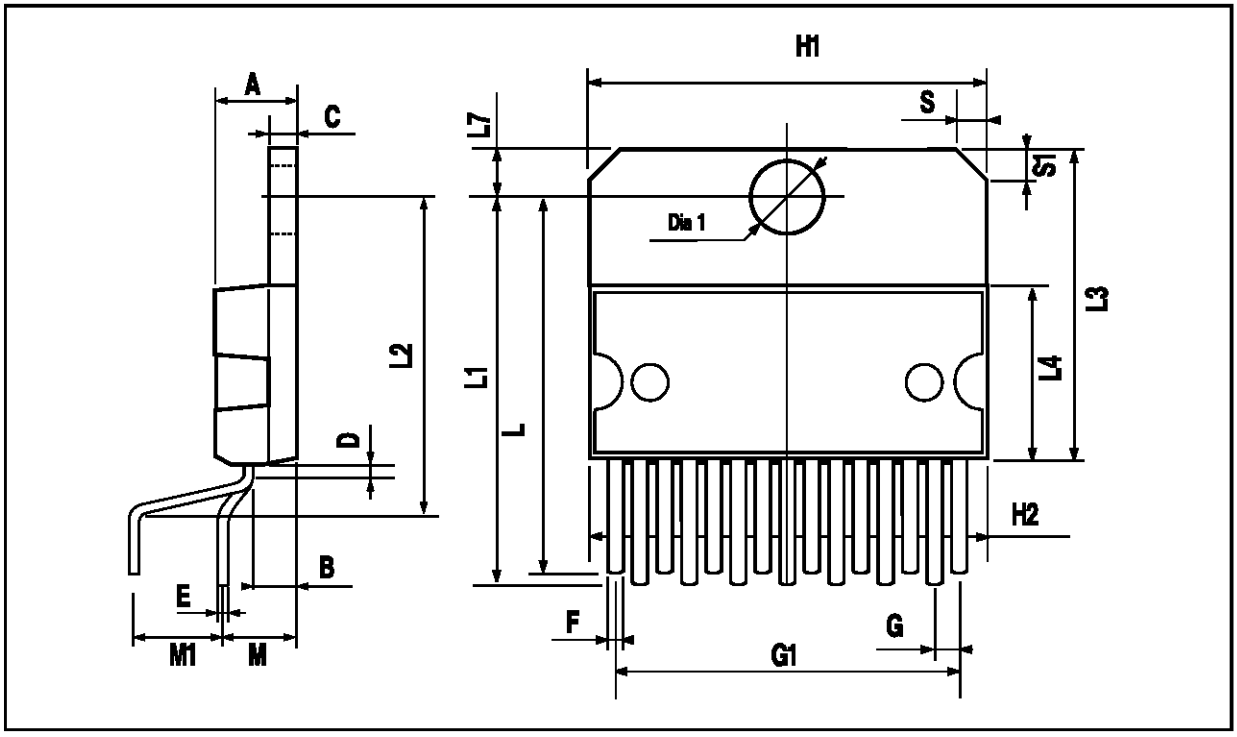

Information furnished is believed to be accurate and reliable. However, SGS-THOMSON Microelectronics assumes no responsibility for the consequences of use of such information nor for any infringement of patents or other rights of third parties which may result from its use. No license is granted by implication or otherwise under any patent or patent rights of SGS-THOMSON Microelectronics. Specification mentioned in this publication are subject to change without notice. This publication supersedes and replaces all information previously supplied. SGS-THOMSON Microelectronics products are not authorized for use as critical components in life support devices or systems without express written approval of SGS-THOMSON Microelectronics.

© 1997 SGS-THOMSON Microelectronics – Printed in Italy – All Rights Reserved

SGS-THOMSON Microelectronics GROUP OF COMPANIES

Australia - Brazil - Canada - China - France - Germany - Hong Kong - Italy - Japan - Korea - Malaysia - Malta - Morocco - The Netherlands - Singapore - Spain - Sweden - Switzerland - Taiwan - Thailand - United Kingdom - U.S.A.